HYDRANTS

DOMEX WATER

The company DOMEX started its business operation in 1992 in Piława Górna. 10 years later, in 2002, the company was transformed into a limited liability company and moved to a newly built location in Dzierżoniów, within the Wałbrzych Special Economic Area.

We are one of the biggest Polish manufacturers of water, sewage and gas fittings. Our specialty are hydrants, steel couplings and fittings. Our offer is also complemented by professional services provided in the field of comprehensive CNC machining and powder painting. We have many years of experience and references in contract production for globally recognized companies from many industries including textile, agricultural machinery and automotive.

As a family-owned business with a long tradition, we chose a value-based management model, which determines our sustainable development and decisions we make every day.

The dynamic development of our company due to the expanding production portfolio, the implementation of new technologies and management methods have resulted in an increase in the competitiveness of our company in terms of quality and price, thanks to which we are successful in our industry on the domestic and foreign market. We work on the basis of modern machinery park and innovative technology, while all manufactured products have the necessary certifications and attestations.

The motto of our company is to cover as many needs of the waterworks and wastewater sector customers as possible, thus, in addition to serial products, we also manufacture products according to individual requirements of our customers.

As a contract manufacturing company, we can offer ready-made solutions or participate in the manufacturing process of own-brand products.

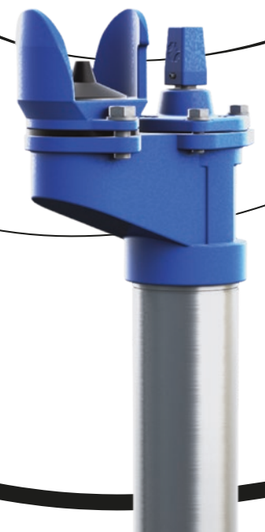

WE BUILD

We have been manufacturing hydrants for almost 30 years and are constantly working on improving their properties and quality, meeting the most restrictive normative requirements. A modern design department equipped with professional tools and many years of experience is our huge competitive advantage, ensuring the highest global standard of the technological line.

STRENGTHS AND SOLUTIONS OF OUR HYDRANTS:

TRENCHLESS REPAIR METHOD
Replacement of internal components and subassemblies without having to dig out and disassemble the hydrant.

EFFECTIVE DRAINAGE SYSTEM
The proper drainage system for residual water in the hydrant prevents it from freezing and damage of parts inside the hydrant.

QUALITY TOGETHER

HYDRANT CONSTRUCTION
The reinforced structure and increased durability of the components ensure trouble-free operation.

ANTI-CORROSION PROTECTION - MAXIMUM LIFE
Thanks to modern painting technologies with the use of our own paint shops, we obtain high-quality anti-corrosion coatings. In addition, the use of stainless materials and corrosion protection of external and internal parts guarantee many years of operational lifetime.

WIDE AND VARIOUS RANGE OF MODELS
Our design facilities and modern machinery park allow us to create hydrants according to the standards and needs of customers around the world.

100% OF HYDRANTS COMPLETE EFFICIENCY TESTS
We have the innovative test stand for hydrants' testing.

PRESSURE STRENGTH
Thanks to the use of precise machines for material processing and thoughtful design solutions, we maintain the highest standards in terms of tightness.

CERTIFICATES AND APPROVALS
All our hydrants are manufactured according to the highest standards and comply with the standards in force in many countries.

DOMEX WATER

UNDERGROUND HYDRANTS

601	page 12	602	page 14	614	page 16

Underground hydrant DN80
double or single closing

Underground ductile iron hydrant DN80
double or single closing

Underground hydrant DN80
double or single closing with ball

OVERGROUND HYDRANTS

604	page 22	605	page 24	606	page 26

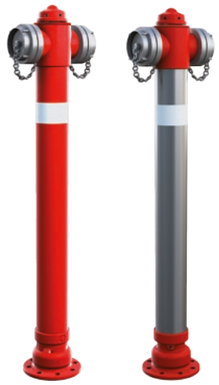

Overground hydrant DN80
single closing

Overground hydrant breakable DN80
single closing

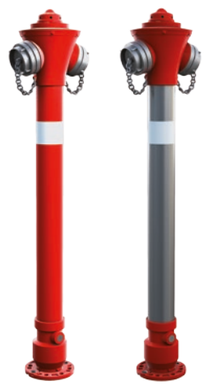

Overground hydrant DN80
double or single closing

DOMEX WATER

OVERGROUND HYDRANTS

607	page 28	608	page 30	609	page 32

Overground hydrant breakable DN80
double or single closing

Overground ductile iron hydrant breakable DN80
double or single closing

Overground hydrant DN100
double or single closing

OVERGROUND HYDRANTS

610	page 34	612	page 36	613	page 38

Overground hydrant breakable DN100
double or single closing

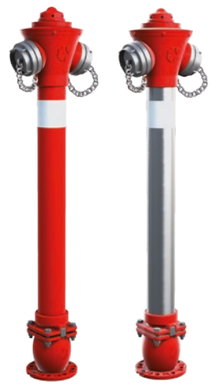

Overground hydrant DN80
double closing with ball

Overground hydrant breakable DN80
double closing with ball

DOMEX WATER

UNDERGROUND HYDRANTS

DOMEX WATER

We reserve the right to design changes according to standards and technological progress

2020/01

INDEX NO.

601

UNDERGROUND HYDRANT DN80

DOUBLE OR SINGLE CLOSING

APPLICATION

Waterworks and fire-fighting installations.

DESIGN FEATURES

- head, base - ductile iron EN GJS-500-7
- column:
  - 601A - carbon steel S235JR
  - 601B - stainless steel (0H18N9 / AISI 304 / 1.4301)
  - 601C - ductile iron (EN GJS-500-7 / 5.3200 / EN JS1030)
  - 601D - carbon steel S235JR hot dip galv.
- rolled stem made of stainless steel (2H13, AISI 420, 1.4021)
- stem seal - o-ring
- sealing at the outlet - polution deflector
- self - draining when fully closed
- rod:
  - column A, C, D - constructional steel with anti-corrosive coating or stainless steel
  - column B - stainless steel
- double or single piston closing system
- closing pistons - ductile iron fully vulcanised with EPDM
- internal elements may be replaced under pressure (with the gate valve fully open)
- tightening spring - stainless steel
- rotating flange - for easier installation rotates 0° to 360°
- optionally - brass bushing at piston working location
- corrosion protection
  – epoxy coating

TECHNICAL DATA / STANDARDS

- design, requirements, test methods, application acc. PN-EN 14339, PN-EN 1074-6
- material acc. PN-EN 1563, PN-79/H-74244, PN-EN 10088-1
- flange PN16 acc. PN-EN 1092-2
- operating wrench acc. PN-63/M-74085, DIN 3223
- jaw connection acc. PN-M-51154

No.	Part	Material	Standard
1	Head	EN GJS-500-7	PN-EN 1563
2	Pin	Spring steel	PN-EN ISO 8752
3	Washer	1.4301	PN-EN 10088-1
4	O-ring	EPDM	PN-EN 681-1
5	Bolt	S235JR / Zn5	PN-EN ISO 4762
6	Washer	S235JR / Zn5	PN-EN ISO 4089
7	Cover	EN GJS-500-7	PN-EN 1563
8	O-ring	EPDM	PN-EN 681-1
9	Bolt Tr	1.4021	PN-EN 10088-1
10	Nut Tr	CW617N	PN-EN 12164
11	Hydrant head	EN GJS-500-7	PN-EN 1563
12	Slider	EN GJS-500-7	PN-EN 1563
13	Column	S235JR / A2 / EN GJS-500-7 / S235JR hot dip galv.	PN-79/H-74244 PN-EN 10088-1 PN-EN 1563
14	Rod	S235JR / Zn5 / A2	PN-EN 10219-2 PN-EN 10088-1
15	Flexible pin	Spring steel	PN-EN ISO 8752
16	Closing piston	EN GJS-500-7	PN-EN 1563
17	Shut off piston	EN GJS-500-7	PN-EN 1563
18	Tightening spring	Spring steel	PN-EN 10088-1
19	Hydrant base	EN GJS-500-7	PN-EN 1563
20	Piston guide	PE	PN-89/C-89286
21	Half-ring	EN GJS-500-7	PN-EN 1563
22	Bushing	Copper	PN-79/H92710
23	Pollution deflector	EPDM	PN-EN 681-1
24	Jaw coupling	EN GJS-500-7	PN-EN 1563
25	Ring	CW617N	PN-EN 12164
26	Cover	PE	PN-89/C-89286
27	String	PP	
28	Drainage plug	PE	PN-89/C-89286
29	Washer	S235JR / Zn5	PN-EN ISO 4089
30	Bolt	S235JR / Zn5	PN-EN ISO 4017

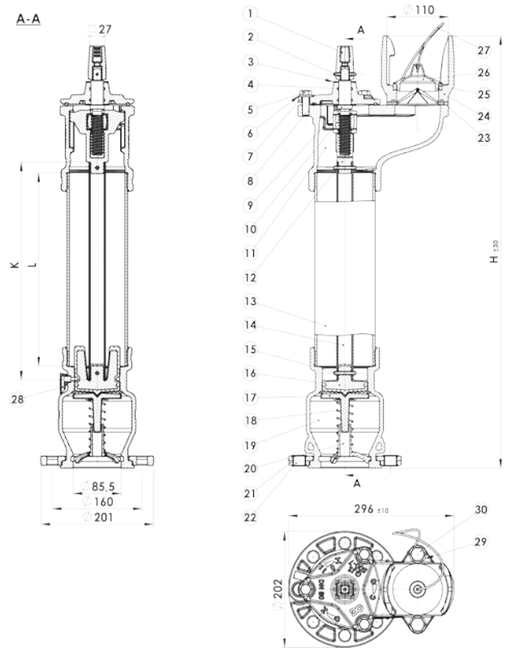

DN	Height H [mm]	Installation depth Rd [mm]	Weight [kg]
80	750	1000	24,6
80	1000	1250	27,8
80	1250	1500	31,0
80	1500	1750	34,1

We reserve the right to design changes according to standards and technological progress
2020/01

We reserve the right to design changes according to standards and technological progress
2020/01

INDEX NO.

602

UNDERGROUND DUCTILE IRON HYDRANT DN80

DOUBLE OR SINGLE CLOSING

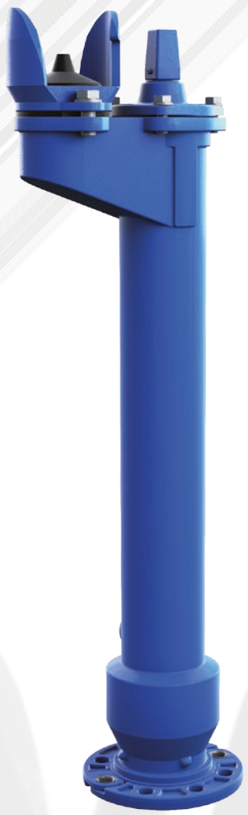

APPLICATION

Waterworks and fire-fighting installations.

DESIGN FEATURES

- hydrant body - monolith made of ductile iron EN GJS-500-7
- rolled stem made of stainless steel (2H13, AISI 420, 1.4021)
- stem seal - o-ring
- sealing at the outlet - polution deflector
- self - draining when fully closed
- rod - constructional steel with anti-corrosive coating or stainless steel
- double or single piston closing system
- closing pistons - ductile iron, fully vulcanised with EPDM
- internal elements may be replaced under pressure (with the gate valve fully open)
- tightening spring - stainless steel
- rotating flange - for easier installation rotates 0° to 360°
- optionally - brass bushing at piston working location
- corrosion protection
  – epoxy coating

TECHNICAL DATA / STANDARDS

- design, requirements, test methods, application acc. PN-EN 14339, PN-EN 1074-6
- material acc. PN-EN 1563
- flange PN16 acc. PN-EN 1092-2
- operating wrench acc. PN-63/M-74085, DIN 3223
- jaw connection acc. PN-M-51154

No.	Part	Material	Standard
1	Head	EN GJS-500-7	PN-EN 1563
2	Pin	Spring steel	PN-EN ISO 8752
3	Washer	1.4301	PN-EN 10088-1
4	O-ring	EPDM	PN-EN 681-1
5	Bolt	S235JR / Zn5	PN-EN ISO 4017
6	Washer	S235JR / Zn5	PN-EN ISO 7089
7	Cover	EN GJS-500-7	PN-EN 1563
8	O-ring	EPDM	PN-EN 681-1
9	Bolt Tr	1.4021	PN-EN 10088-1
10	Nut Tr	CW617N	PN-EN 12164
11	Slider DN80	EN GJS-500-7	PN-EN 1563
12, 13, 14	Hydrant column	EN GJS-500-7	PN-EN 1563
15	Rod	S235JR / Zn5 / A2	PN-EN 10219-2 PN-EN 10088-1
16	Flexible pin	S235JR / Zn5	PN-EN ISO 8752
17	Closing piston	EN GJS-500-7	PN-EN 1563
18	Cut-off piston	EN GJS-500-7	PN-EN 1563
19	Tightening spring	Spring steel	PN-EN 10219-2
20	Piston guide	PE	PN-89/C-89286
21	Half-ring	EN GJS-500-7	PN-EN 1563
22	Bushing	Copper	PN-79/H92710
23	Pollution deflector	EPDM	PN-EN 681-1
24	Jaw coupling	EN GJS-500-7	PN-EN 1563
25	Ring	CW617N	PN-EN 12164
26	Cover	PE	PN-89/C-89286
27	String	PP	
28	Bolt	S235JR / Zn5	PN-EN ISO 4017
29	Washer	S235JR / Zn5	PN-EN ISO 7089
30	Drainage plug	PE	PN-89/C-89286

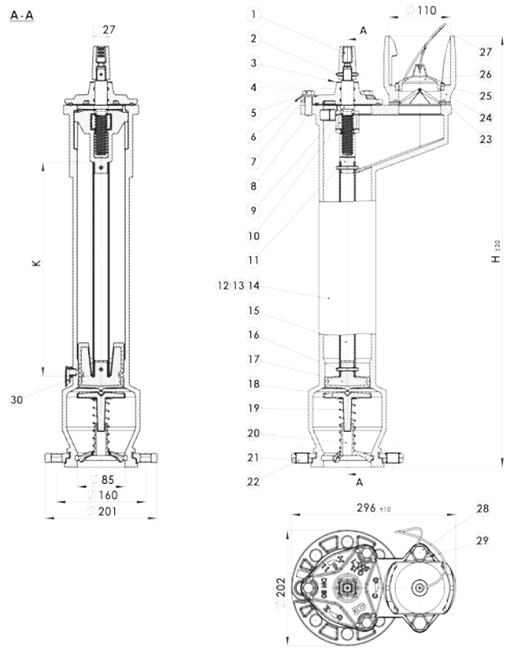

DN	Height H [mm]	Installation depth Rd [mm]	Weight [kg]
80	750	1000	25,4
80	1000	1250	31,5
80	1250	1500	39,3

We reserve the right to design changes according to standards and technological progress
2020/01

We reserve the right to design changes according to standards and technological progress
2020/01

INDEX NO.

614

UNDERGROUND HYDRANT DN80

DOUBLE OR SINGLE CLOSING WITH BALL

APPLICATION

Waterworks and fire-fighting installations.

DESIGN FEATURES

- head, base - ductile iron EN GJS-500-7
- column:
  - 614A - carbon steel S235JR
  - 614B - stainless steel (0H18N9 / AISI 304 / 1.4301)
  - 614C - ductile iron (EN GJS-500-7 / 5.3200 / EN JS1030)
  - 614D - carbon steel S235JR hot dip galv.
- rolled stem made of stainless steel (2H13, AISI 420, 1.4021)
- stem seal - o-ring
- sealing at the outlet - polution deflector
- self - draining when fully closed
- rod:
  - column A, C, D - constructional steel with anti-corrosive coating or stainless steel
  - column B - stainless steel
- double closing system
- closing piston - ductile iron, fully vulcanised with EPDM
- internal elements may be replaced under pressure (with the gate valve fully open)
- rotating flange - for easier installation rotates 0° to 360°
- optionally - brass bushing at piston working location
- corrosion protection
  – epoxy coating

TECHNICAL DATA / STANDARDS

- design, requirements, test methods, application acc. PN-EN 14339, PN-EN 1074-6
- material acc. PN-EN 1563, PN-79/H-74244, PN-EN 10088-1
- flange PN16 acc. PN-EN 1092-2
- operating wrench acc. PN-63/M-74085, DIN 3223
- jaw connection acc. PN-M-51154

No.	Part	Material	Standard
1	Head	EN GJS-500-7	PN-EN 1563
2	Pin	Spring steel	PN-EN ISO 8752
3	Washer	1.4301	PN-EN 10088-1
4	O-ring	EPDM	PN-EN 681-1
5	Bolt	S235JR / Zn5	PN-EN ISO 4762
6	Washer	S235JR / Zn5	PN-EN ISO 4089
7	Cover HP DN80	EN GJS-500-7	PN-EN 1563
8	O-ring	EPDM	PN-EN 681-1
9	Bolt Tr	1.4021	PN-EN 10088-1
10	Nut Tr	CW617N	PN-EN 12164
11	Head HP DN80	EN GJS-500-7	PN-EN 1563
12	Slider DN80	EN GJS-500-7	PN-EN 1563
13	Pin	Spring steel	PN-EN ISO 8752
14	Column	S235JR / A2 / EN GJS-500-7 / S235JR hot dip galv.	PN-79/H-74244 PN-EN 10088-1 PN-EN 1563
15	Rod	S235JR / Zn5 / A2	PN-EN 10219-2 PN-EN 10088-1
16	Pin	Spring steel	PN-EN ISO 8752
17	Upper ball base	EN GJS-500-7	PN-EN 1563
18	Closing piston	EN GJS-500-7	PN-EN 1563
19	Ball base seal	EPDM	PN-EN 681-1
20	Ball	Steel EPDM	PN-EN 10088-1 + PN-EN 681-1
21	Bottom ball base	EN GJS-500-7	PN-EN 1563
22	Half-ring	EN GJS-500-7	PN-EN 1563
23	Bushing	Copper	PN-79/H92710
24	Nut	S235JR / Zn5	PN-EN ISO 4032
25	Washer	S235JR / Zn5	PN-EN ISO 4089
26	Bolt	S235JR / Zn5	PN-EN ISO 4762
27	Pollution deflector	EPDM	PN-EN 681-1
28	Jaw coupling	EN GJS-500-7	PN-EN 1563
29	Ring	CW617N	PN-EN 12164
30	Cover	PE	PN-89/C-89286
31	String		
32	Washer	S235JR / Zn5	PN-EN ISO 4089
33	Bolt	S235JR / Zn5	PN-EN ISO 4762
34	Drainage plug	PE	PN-89/C-89286

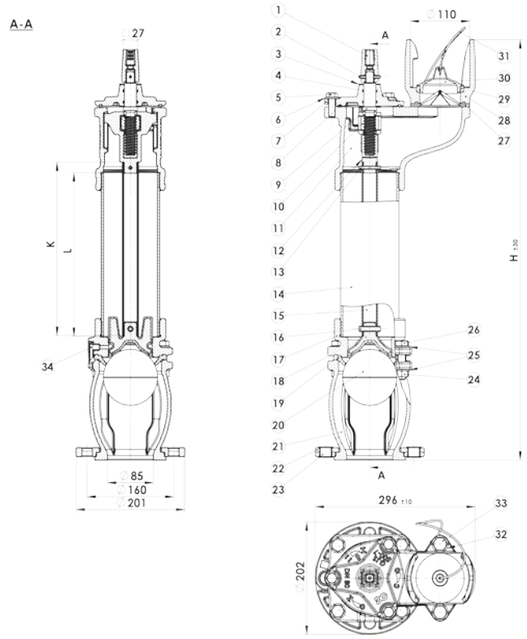

DN	Height H [mm]	Installation depth Rd [mm]	Weight [kg]
80	750	1000	28,7
80	1000	1250	31,8
80	1250	1500	35,0
80	1500	1750	38,1

We reserve the right to design changes according to standards and technological progress
2020/01

We reserve the right to design changes according to standards and technological progress
2020/01

DOMEX
DOMEX

DOMEX WATER

OVERGROUND HYDRANTS

DOMEX WATER

We reserve the right to design changes according to standards and technological progress

2020/01

INDEX NO.

604

OVERGROUND HYDRANT DN80

SINGLE CLOSING

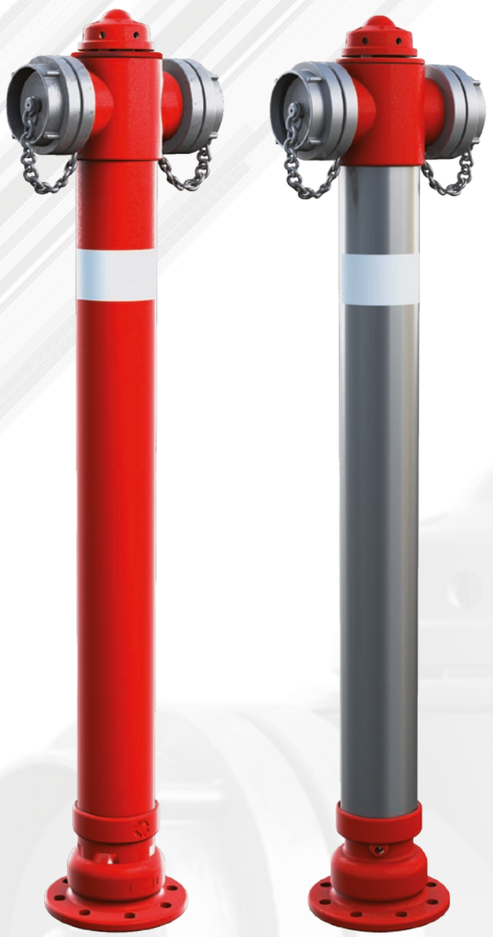

APPLICATION

Waterworks and fire-fighting installations.

DESIGN FEATURES

- head, base - ductile iron EN GJS-500-7
- column:
  - 604A - carbon steel S235JR
  - 604B - stainless steel (0H18N9 / AISI 304 / 1.4301)
  - 604C - ductile iron (EN GJS-500-7 / 5.3200 / EN JS1030)
  - 604D - carbon steel S235JR hot dip galv.
- rolled stem made of stainless steel (2H13, AISI 420, 1.4021)
- stem seal - o-ring
- self - draining when fully closed
- rod:
  - column A, C, D - constructional steel with anti-corrosive coating or stainless steel
  - column B - stainless steel
- single piston closing system
- closing piston - ductile iron, fully vulcanised with EPDM
- internal elements may be replaced without the need to dig the hydrant out
- corrosion protection:
  - external - polyester RAL3000, min. 250 µm, UV resistant
  - internal - epoxy coating approved for contact with drinking water
- optionally - brass bushing at piston working location

TECHNICAL DATA / STANDARDS

- design, requirements, test methods, application acc. PN-EN 14339, PN-EN 1074-6
- material acc. PN-EN 1563, PN-79/H-74244, PN-EN 10088-1
- flange PN16 acc. PN-EN 1092-2
- base B75 acc. PN-M-51038
- operating wrench acc. PN-63/M-74085, DIN 3223

No.	Part	Material	Standard
1	Operating nut	EN GJS-500-7	PN-EN 1563
2	Cover	EN GJS-500-7	PN-EN 1563
3	Head	EN GJS-500-7	PN-EN 1563
4	Base 75	Ak-11 / Aluminium	PN-91/M-51038
5	Nut Tr	CW617N	PN-EN 12164
6	Bolts Tr	2H13	PN-EN 10088-1
7	Rod	S235JR / Zn5 / A2	PN-EN 10219-2 PN-EN 10088-1
8	Hydrant column	S235JR / A2 / EN GJS-500-7 / S235JR hot dip galv.	PN-79/H-74244 PN-EN 10088-1 PN-EN 1563
9	Closing piston	EN GJS-500-7 + EPDM	PN-EN 1563 PN-EN 681-1
10	Base	EN GJS-500-7	PN-EN 1563
11	Drainage plug	PE	PN-89/C-89286
12	Slider	EN GJS-500-7	PN-EN 1563
13	Washer	A2 (0H18N9)	PN-EN 10088-1
14	Cover 75	PE	PN-91/M-51024
15	O-ring	EPDM	PN-EN 681-1
16	O-ring	EPDM	PN-EN 681-1
17	O-ring	EPDM	PN-EN 681-1
18	Pin	Spring steel	PN-EN ISO 8752
19	Pin	Spring steel	PN-EN ISO 8752

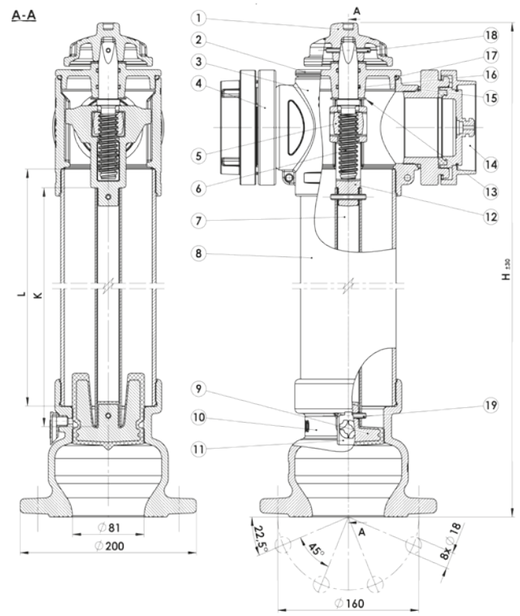

DN	Height H [mm]	Installation depth Rd [mm]	Weight [kg]
80	1950	1000	36,1
80	2150	1250	38,7
80	2350	1500	41,3

We reserve the right to design changes according to standards and technological progress
2020/01

We reserve the right to design changes according to standards and technological progress
2020/01

INDEX NO.

605

OVERGROUND HYDRANT BREAKABLE DN80

SINGLE CLOSING

APPLICATION

Waterworks and fire-fighting installations.

DESIGN FEATURES

- head, base - ductile iron EN GJS-500-7
- column:
  - 605A - carbon steel S235JR
  - 605B - stainless steel (0H18N9 / AISI 304 / 1.4301)
  - 605C - ductile iron (EN GJS-500-7 / 5.3200 / EN JS1030
  - 605D - carbon steel S235JR hot dip galv.
- rolled stem made of stainless steel (2H13, AISI 420, 1.4021)
- protection against breaking
- stem seal - o-ring
- self - draining when fully closed
- rod:
  - column A, C, D - constructional steel with anti-corrosive coating or stainless steel
  - column B - stainless steel
- special A2 bolt at the breaking point
- single piston closing system
- closing piston - ductile iron, fully vulcanised with EPDM
- internal elements may be replaced without the need to dig the hydrant out
- corrosion protection:
  - external - polyester RAL3000, min. 250 µm, UV resistant
  - internal - epoxy coating approved for contact with drinking water
- optionally - brass bushing at piston working location

TECHNICAL DATA / STANDARDS

- design, requirements, test methods, application acc. PN-EN 14339, PN-EN 1074-6
- material acc. PN-EN 1563, PN-79/H-74244, PN-EN 10088-1
- flange PN16 acc. PN-EN 1092-2
- base B75 acc. PN-M-51038
- operating wrench acc. PN-63/M-74085, DIN 3223

No.	Part	Material	Standard
1	Operating nut	EN GJS-500-7	PN-EN 1563
2	Cover	EN GJS-500-7	PN-EN 1563
3	Head	EN GJS-500-7	PN-EN 1563
4	Base 75	Ak-11 / Aluminium	PN-91/M-51038
5	Coupling cover 75	Ak-11 / Aluminium	PN-91/M-51024
6	Special bolt	A2	PN-EN ISO 4762
7	Washer	A2	PN-EN ISO 7089
8	Nut	A2	PN-EN ISO 4032
9	Lock	EN GJS-500-7	PN-EN 1563
10	Pin	Spring steel	PN-EN ISO 8752
11	Bottom flange DN80	EN GJS-500-7	PN-EN 1563
12, 13, 14	Underground break-away column	S235JR / A2 / EN GJS-500-7 / S235JR hot dip galv.	PN-79/H-74244 PN-EN 10088-1 PN-EN 1563
15	Drainage plug	PE	PN-89/C-89286
16	Base	EN GJS-500-7	PN-EN 1563
17	Closing piston DN80	EN GJS-500-7 + EPDM	PN-EN 1563 PN-EN 681-1
18	Pin	Spring steel	PN-EN ISO 8752
19	Bottom rod	S235JR / Zn5 / A2	PN-EN 10219-2 PN-EN 10088-1
20	Slider DN80	EN GJS-500-7	PN-EN 1563
21	Bolt Tr	1.4021	PN-EN 10088-1
22	Nut Tr	CW617N	PN-EN 12164
23	Pin	1.4021	PN-EN ISO 8752
24	Distance bushing	1.4021 / 2H13 / AISI 420	PN-EN 10219
25	O-ring	EPDM	PN-EN 681-1
26	Top breakaway flange	EN GJS-500-7	PN-EN 1563
27	Base	EN GJS-500-7	PN-EN 1563
28	Pin	Spring steel	PN-EN ISO 8752
29	Overground column	S235JR / A2 / EN GJS-500-7 / S235JR hot dip galv.	PN-79/H-74244 PN-EN 10088-1 PN-EN 1563
30	Rod	S235JR / Zn5 / A2	PN-EN 10219-2 PN-EN 10088-1
31	O-ring	EPDM	PN-EN 681-1
32	Top end	1.4021 / 2H13 / AISI 420	PN-EN 10088-1
33	Pin	Spring steel	PN-EN ISO 8752
34	O-ring	EPDM	PN-EN 681-1
35	O-ring	EPDM	PN-EN 681-1
36	Washer	0H18N9 / 1.4301 / AISI 304	PN-EN 10088-1
37	Pin	Spring steel	PN-EN ISO 8752

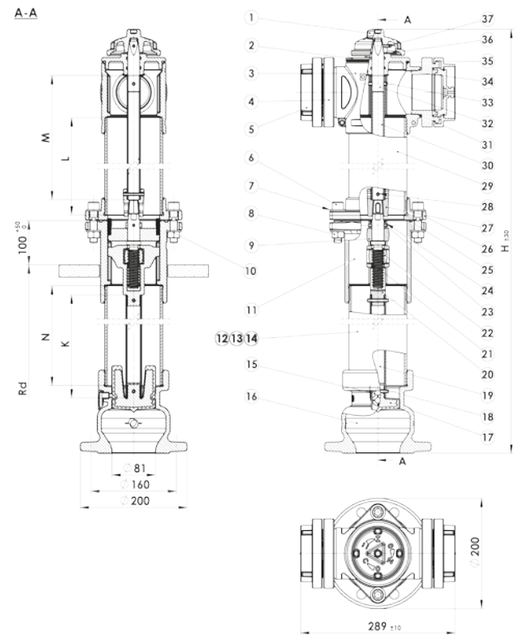

DN	Height H [mm]	Installation depth Rd [mm]	Weight [kg]
80	1950	1000	42,3
80	2150	1250	44,8
80	2350	1500	47,3

INDEX NO.

606

OVERGROUND HYDRANT DN80

DOUBLE OR SINGLE CLOSING

APPLICATION

Waterworks and fire-fighting installations.

DESIGN FEATURES

- head, base - ductile iron EN GJS-500-7
- column:
  - 606A - carbon steel S235JR
  - 606B - stainless steel (0H18N9 / AISI 304 / 1.4301)
  - 606C - ductile iron (EN GJS-500-7 / 5.3200 / EN JS1030)
  - 606D - carbon steel S235JR hot dip galv.
- rolled stem made of stainless steel (2H13, AISI 420, 1.4021)
- stem seal - o-ring
- self - draining when fully closed
- rod:
  - column A, C, D - constructional steel with anti-corrosive coating or stainless steel
  - column B - stainless steel
- double or single piston closing system
- closing pistons - ductile iron, fully vulcanised with EPDM
- internal elements may be replaced without the need to dig the hydrant out under pressure (with the gate valve fully open)
- corrosion protection:
  - external - polyester RAL3000, min. 250 µm, UV resistant
  - internal - epoxy coating approved for contact with drinking water
- rotating flange - for easier installation rotates 0° to 360°
- optionally - brass bushing at piston working location

TECHNICAL DATA / STANDARDS

- design, requirements, test methods, application acc. PN-EN 14339, PN-EN 1074-6
- material acc. PN-EN 1563, PN-79/H-74244, PN-EN 10088-1
- flange PN16 acc. PN-EN 1092-2
- base B75 acc. PN-M-51038
- operating wrench acc. PN-63/M-74085, DIN 3223

No.	Part	Material	Standard
1	Operating nut	EN GJS-500-7	PN-EN 1563
2	Cover EN	GJS-500-7	PN-EN 1563
3	Head	EN GJS-500-7	PN-EN 1563
4	Base 75	Ak-11 / Aluminium	PN-91/M-51038
5	Nut Tr	CW617N	PN-EN 12164
6	Bolt Tr	2H13	PN-EN 10088-1
7	Rod	S235JR / Zn5 / A2	PN-EN 10219-2 PN-EN 10088-1
8	Hydrant column	S235JR / A2 / EN GJS-500-7 / S235JR hot dip galv.	PN-79/H-74244 PN-EN 10088-1 PN-EN 1563
9	Drainage plug	PE	PN-89/C-89286
10	Pin	EN GJS-500-7 + EPDM	PN-EN 1563 PN-EN 681-1
11	Tightening spring	Spring steel	PN-EN ISO 8752
12	Piston guide	PE	PN-89/C-89286
13	Bushing	Copper	PN-79/H92710
14	Half-ring	EN GJS-500-7	PN-EN 1563
15	Hydrant base	EN GJS-500-7	PN-EN 1563
16	Closing piston	EN GJS-500-7	PN-EN 1563
17	Pin	Spring steel	PN-EN ISO 8752
18	Guide DN80	EN GJS-500-7	PN-EN 1563
19	Cover 75	Ak-11 / Aluminium	PN-91/M-51024
20	O-ring	EPDM	PN-EN 681-1
21	Washer	1.4301	PN-EN 10088-1
22	Special seal	EPDM	PN-EN 681-1
23	O-ring	EPDM	PN-EN 681-1
24	Pin	Spring steel	PN-EN ISO 8752
25	Bolt	S235JR / Zn5	PN-EN ISO 4762

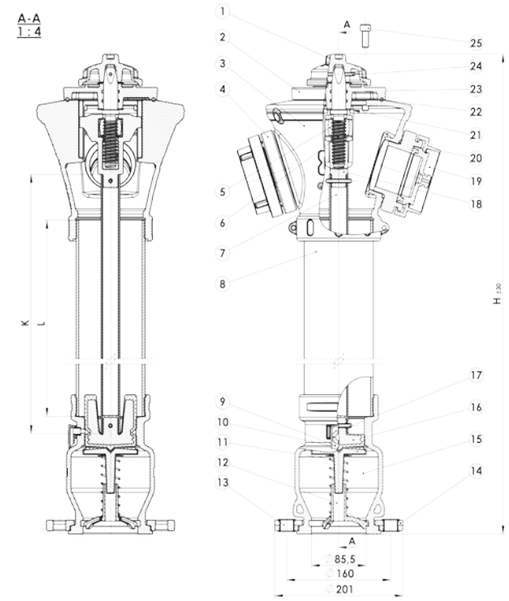

DN	Height H [mm]	Installation depth Rd [mm]	Weight [kg]
80	1950	1000	45,1
80	2150	1250	47,6
80	2350	1500	50,2

INDEX NO.

607

OVERGROUND HYDRANT BREAKABLE DN80

DOUBLE OR SINGLE CLOSING

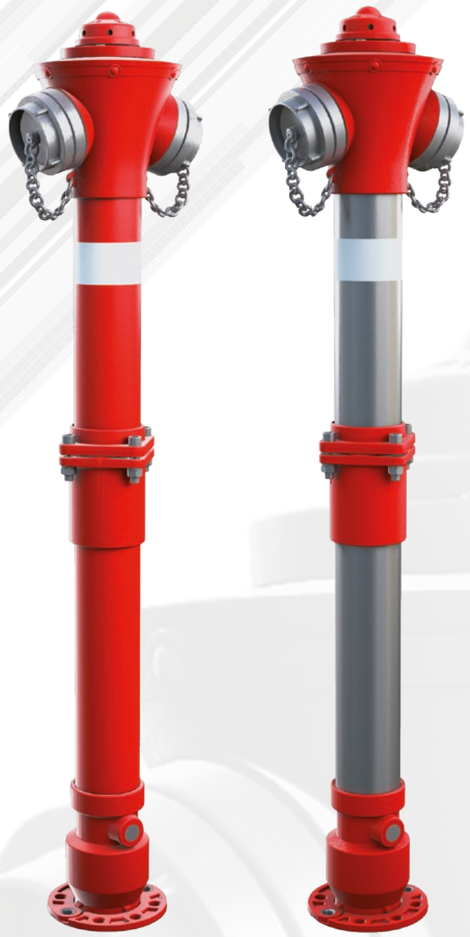

APPLICATION

Waterworks and fire-fighting installations.

DESIGN FEATURES

- head, base - ductile iron EN GJS-500-7
- column:
  - 607A - carbon steel S235JR
  - 607B - stainless steel (0H18N9 / AISI 304 / 1.4301)
  - 607C - ductile iron (EN GJS-500-7 / 5.3200 / EN JS1030)
  - 607D - carbon steel S235JR hot dip galv.
- rolled stem made of stainless steel (2H13, AISI 420, 1.4021)
- protection against breaking
- stem seal - o-ring
- self - draining when fully closed
- rod:
  - column A, C, D - constructional steel with anti-corrosive coating or stainless steel
  - column B - stainless steel
- special A2 bolt at the breaking point
- double or single piston closing system
- closing pistons - ductile iron, fully vulcanised with EPDM
- internal elements may be replaced without the need to dig the hydrant out under pressure (with the gate valve fully open)
- corrosion protection:
  - external - polyester RAL3000, min. 250 µm, UV resistant
  - internal - epoxy coating approved for contact with drinking water
- rotating flange - for easier installation rotates 0° to 360°
- optionally - brass bushing at piston working location

TECHNICAL DATA / STANDARDS

- design, requirements, test methods, application acc. PN-EN 14339, PN-EN 1074-6
- material acc. PN-EN 1563, PN-79/H-74244, PN-EN 10088-1
- flange PN16 acc. PN-EN 1092-2
- base B75 acc. PN-M-51038
- operating wrench acc. PN-63/M-74085, DIN 3223

No.	Part	Material	Standard
1	Operating nut	EN GJS-500-7	PN-EN 1563
2	Cover	EN GJS-500-7	PN-EN 1563
3	Head	EN GJS-500-7	PN-EN 1563
4	Base 75	Ak-11 / Aluminium	PN-91/M-51038
5	Cover 75	Ak-11 / Aluminium	PN-91/M-51024
6	Top flange DN80	EN GJS-500-7	PN-EN 1563
7	Special bolt	A2	PN-EN ISO 4762
8	Washer	A2	PN-EN ISO 7089
9	Pin	Spring steel	PN-EN ISO 8752
10	Nut	A2	PN-EN ISO 4032
11	Bottom break-away flange DN80	EN GJS-500-7	PN-EN 1563
12, 13, 14	Underground column	S235JR / A2 / EN GJS-500-7 / S235JR hot dip glav.	PN-79/H-74244 PN-EN 10088-1 PN-EN 1563
15	Base	EN GJS-500-7	PN-EN 1563
16	Drainage plug	PE	PN-89/C-89286
17	Collet	Copper	PN-79/H92710
18	Half-ring	EN GJS-500-7	PN-EN 1563
19	Piston guide	PE	PN-89/C-89286
20	Slider spring	Steel	PN-EN 10088-1
21	Bottom closing piston DN80	EN GJS-500-7 + EPDM	PN-EN 1563 PN-EN 681-1
22	Top closing piston DN80	EN GJS-500-7 + EPDM	PN-EN 1563 PN-EN 681-1
23	Pin	Spring steel	PN-EN ISO 8752
24	Lower rod	S235JR / Zn5 / A2	PN-EN 10219-2 PN-EN 10088-1
25	Slider DN80	EN GJS-500-7	PN-EN 1563
26	Bolt Tr	1.4021	PN-EN 10088-1
27	Nut Tr	CW617N	PN-EN 12164
28	Lock	EN GJS-500-7	PN-EN 1563
29	Flexible pin	Spring steel	PN-EN ISO 8752
30	O-ring	EPDM	PN-EN 681-1
31	Distance bushing	1.4021	PN-EN 10219
32	Base	EN GJS-500-7	PN-EN 1563
33	Pin	Spring steel	PN-EN ISO 8752
34	Overground column	S235JR / A2 / EN GJS-500-7 / S235JR hot dip galv.	PN-79/H-74244 PN-EN 10088-1 PN-EN 1563
35	Top rod	S235JR / Zn5 / A2	PN-EN 10219-2 PN-EN 10088-1
36	O-ring	EPDM	PN-EN 681-1
37	Top end	1.4021	PN-EN 10088-1
38	Pin	Spring steel	PN-EN ISO 8752
39	O-ring	EPDM	PN-EN 681-1
40	Special seal	EPDM	PN-EN 681-1
41	Washer	1.4301	PN-EN 10088-1
42	Pin	Spring steel	PN-EN ISO 8752
43	Bolt	S235JR / Zn5	PN-EN ISO 4762

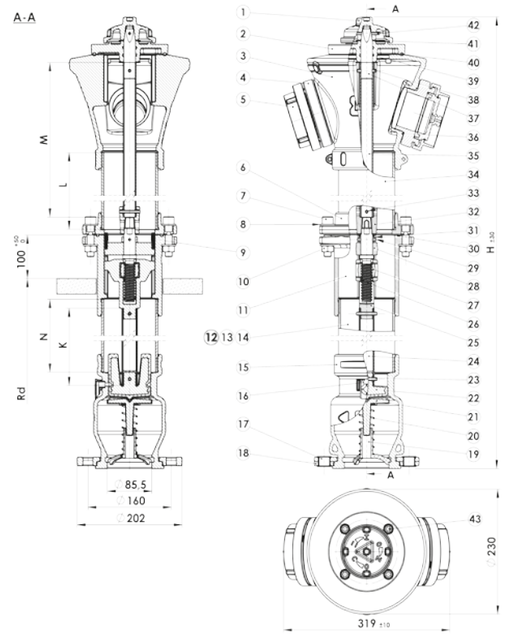

DN	Height H [mm]	Installation depth Rd [mm]	Weight [kg]
80	1950	1000	50,7
80	2150	1250	53,3
80	2350	1500	55,8

INDEX NO.

608

OVERGROUND DUCTILE IRON HYDRANT BREAKABLE DN80

DOUBLE OR SINGLE CLOSING

APPLICATION

Waterworks and fire-fighting installations.

DESIGN FEATURES

- hydrant body - monolith made of ductile iron EN GJS-500-7
- rolled stem made of stainless steel (2H13, AISI 420, 1.4021)
- protection against breaking
- stem seal - o-ring
- self - draining when fully closed
- rod - constructional steel with anti-corrosive coating or stainless steel
- special A2 bolt at the breaking point
- double or single piston closing system
- closing pistons - ductile iron, fully vulcanised with EPDM
- rotating flange - for easier installation rotates 0° to 360°
- internal elements may be replaced without the need to dig the hydrant out under pressure (with the gate valve fully open)
- corrosion protection:
  - external - polyester RAL3000, min. 250 µm, UV resistant
  - internal - epoxy coating approved for contact with drinking water
- optionally - brass bushing at piston working location

TECHNICAL DATA / STANDARDS

- design, requirements, test methods, application acc. PN-EN 14339, PN-EN 1074-6
- material acc. PN-EN 1563
- flange PN16 acc. PN-EN 1092-2
- base B75 acc. PN-M-51038
- operating wrench acc. PN-63/M-74085, DIN 3223

No.	Part	Material	Standard
1	Operating nut	EN GJS-500-7	PN-EN 1563
2	Cover	EN GJS-500-7	PN-EN 1563
3	Overground column	EN GJS-500-7	PN-EN 1563
4	Base 75	Ak-11 / Aluminium	PN-91/M-51038
5	Cover 75	Ak-11 / Aluminium	PN-91/M-51024
6	Special cover bolt	A2	PN-EN ISO 4762
7	Washer	A2	PN-EN ISO 7089
8	Nut	A2	PN-EN ISO 4032
9	Lock DN80	EN GJS-500-7	PN-EN 1563
10	Nut Tr	CW617N	PN-EN 12164
11	Bolt Tr	1.4021	PN-EN 10088-1
12	Slider	EN GJS-500-7	PN-EN 1563
13	Drainage plug	PE	PN-89/C-89286
14	Underground column	EN GJS-500-7	PN-EN 1563
15	Bushing	Copper	PN-79/H92710
16	Half-ring	EN GJS-500-7	PN-EN 1563
17	Piston guide	PE	PN-89/C-89286
18	Slider spring	Spring steel	PN-EN 10088-1
19	Bottom closing piston	EN GJS-500-7 + EPDM	PN-EN 1563 PN-EN 681-1
20	Top closing piston	EN GJS-500-7 + EPDM	PN-EN 1563 PN-EN 681-1
21	Pin	Spring steel	PN-EN ISO 8752
22	Rod	S235JR / Zn5 / A2	PN-EN 10219-2 PN-EN 10088-1
23	Pin	Spring steel	PN-EN ISO 8752
24	Pin	Spring steel	PN-EN ISO 8752
25	Distance bushing	1.4021	PN-EN 10219
26	O-ring	EPDM	PN-EN 681-1
27	Base	EN GJS-500-7	PN-EN 1563
28	Flexible pin	Spring steel	PN-EN ISO 8752
29	Top rod	S235JR / Zn5 / A2	PN-EN 10219-2 PN-EN 10088-1
30	O-ring	EPDM	PN-EN 681-1
31	Washer	1.4301	PN-EN 10088-1
32	Top end	1.4021	PN-EN 10088-1
33	Special seal	EPDM	PN-EN 681-1
34	O-ring	EPDM	PN-EN 681-1
35	Bolt	S235JR / Zn5	PN-EN ISO 4762

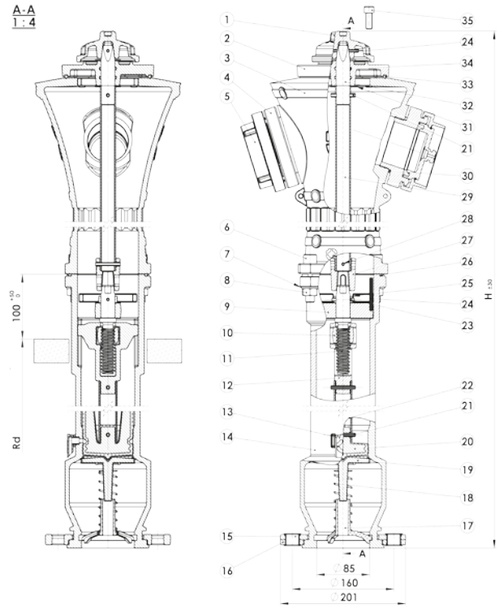

DN	Height H [mm]	Installation depth Rd [mm]	Weight [kg]
80	2150	1250	62,6
80	2350	1500	63,7

INDEX NO. 609

OVERGROUND HYDRANT DN100

DOUBLE OR SINGLE CLOSING

APPLICATION

Waterworks and fire-fighting installations.

DESIGN FEATURES

- head, base - ductile iron EN GJS-500-7
- column:
  - 609A - carbon steel S235JR
  - 609B - stainless steel (0H18N9 / AISI 304 / 1.4301)
  - 609C - ductile iron (EN GJS-500-7 / 5.3200 / EN JS1030)
  - 609D - carbon steel S235JR hot dip galv.
- rolled stem made of stainless steel (2H13, AISI 420, 1.4021)
- stem seal - o-ring
- self - draining when fully closed
- rod - stainless steel
- double or single piston closing system
- closing pistons - ductile iron, fully vulcanised with EPDM
- internal elements may be replaced without the need to dig the hydrant out under pressure (with the gate valve fully open)
- corrosion protection:
  - external - polyester RAL3000, min. 250 µm, UV resistant
  - internal - epoxy coating approved for contact with drinking water
- optionally - brass bushing at piston working location

TECHNICAL DATA / STANDARDS

- design, requirements, test methods, application acc. PN-EN 14339, PN-EN 1074-6
- material acc. PN-EN 1563, PN-79/H-74244, PN-EN 10088-1
- flange PN16 acc. PN-EN 1092-2
- base B75 acc. PN-M-51038
- base A110 acc. PN-M-51038
- operating wrench acc. PN-63/M-74085, DIN 3223

No.	Part	Material	Standard
1	Operating nut	EN GJS-500-7	PN-EN 1563
2	Cover	EN GJS-500-7	PN-EN 1563
3	Head	EN GJS-500-7	PN-EN 1563
4	Base 75	Ak-11 / Aluminium	PN-91/M-51038
5	Base 110	Ak-11 / Aluminium	PN-91/M-51024
6	Cover 110	Ak-11 / Aluminium	PN-91/M-51024
7	Hydrant column	S235JR / A2 / EN GJS-500-7 / S235JR hot dip galv.	PN-79/H-74244 PN-EN 10088-1 PN-EN 1563
8	Drainage plug	PE	PN-89/C-89286
9	Hydrant base	EN GJS-500-7	PN-EN 1563
10	Top closing piston	EN GJS-500-7 + EPDM	PN-EN 1563 PN-EN 681-1
11	Pin	Spring steel	PN-EN ISO 8752
12	Rod	S235JR / Zn5 / A2	PN-EN 10088-1
13	Slider DN100	EN GJS-500-7	PN-EN 1563
14	Bolt Tr	1.4021	PN-EN 10088-1
15	Cover 75	Ak-11 / Aluminium	PN-91/M-51024
16	Nut Tr	CW617N	PN-EN 12164
17	O-ring	EPDM	PN-EN 681-1
18	Washer	1.4301	PN-EN 10088-1
19	O-ring	EPDM	PN-EN 681-1
20	Special seal	EPDM	PN-EN 681-1
21	Pin	Spring steel	PN-EN ISO 8752
22	Bolt	Galvanised steel	PN-EN ISO 4762
23	O-ring	EPDM	PN-EN 681-1
24	Bottom closing piston	EN GJS-500-7 + EPDM	PN-EN 1563 PN-EN 681-1
25	Tightening spring	Spring steel	PN-EN ISO 8752
26	Piston guide	PE	PN-89/C-89286

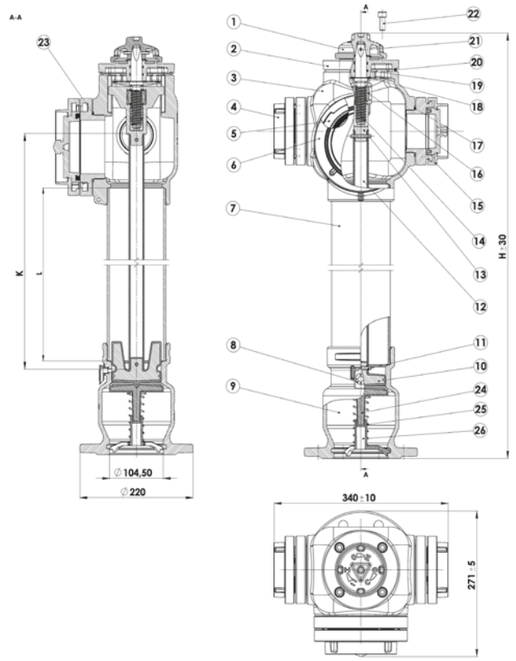

DN	Height H [mm]	Installation depth Rd [mm]	Weight [kg]
100	1950	1000	49,4
100	2150	1250	52,0
100	2350	1500	54,7

INDEX NO.

610

OVERGROUND HYDRANT BREAKABLE DN100

DOUBLE OR SINGLE CLOSING

APPLICATION

Waterworks and fire-fighting installations.

DESIGN FEATURES

- head, base - ductile iron EN GJS-500-7
- column:
  - 610A - carbon steel S235JR
  - 610B - stainless steel (0H18N9 / AISI 304 / 1.4301)
  - 610C - ductile iron (EN GJS-500-7 / 5.3200 / EN JS1030)
  - 610D - carbon steel S235JR hot dip galv.
- rolled stem made of stainless steel (2H13, AISI 420, 1.4021)
- protection against breaking
- stem seal - o-ring
- self - draining when fully closed
- rod - stainless steel
- special A2 bolt at the breaking point
- double or single piston closing system
- closing pistons - ductile iron, fully vulcanised with EPDM
- internal elements may be replaced without the need to dig the hydrant out under pressure (with the gate valve fully open)
- corrosion protection:
  - external - polyester RAL3000, min. 250 µm, UV resistant
  - internal - epoxy coating approved for contact with drinking water
- optionally - brass bushing at piston working location

TECHNICAL DATA / STANDARDS

- design, requirements, test methods, application acc. PN-EN 14339, PN-EN 1074-6
- material acc. PN-EN 1563, PN-79/H-74244, PN-EN 10088-1
- flange PN16 acc. PN-EN 1092-2
- base B75 acc. PN-M-51038
- base A110 acc. PN-M-51038
- operating wrench acc. PN-63/M-74085, DIN 3223

No.	Part	Material	Standard
1	Operating nut	EN GJS-500-7	PN-EN 1563
2	Cover HN DN100	EN GJS-500-7	PN-EN 1563
3	Head HN DN100	EN GJS-500-7	PN-EN 1563
4	Base 75	Ak-11 / Aluminium	PN-91/M-51038
5	Cover 75	Ak-11 / Aluminium	PN-91/M-51024
6	Cover 110	Ak-11 / Aluminium	PN-91/M-51024
7	Base 110	Ak-11 / Aluminium	PN-91/M-51038
8	Special bolt	A2	PN-EN ISO 4762
9	Washer	A2	PN-EN ISO 7089
10	Nut	A2	PN-EN ISO 4032
11	Nut Tr	CW617N	PN-EN 12164
12	Bolt Tr	1.4021	PN-EN 10088-1
13	Rod DN100	EN GJS-500-7	PN-EN 1563
14	Drainage plug	PE	PN-89/C-89286
15	Base DN100	EN GJS-500-7	PN-EN 1563
16	Closing piston DN100	EN GJS-500-7	PN-EN 1563
17	Pin	Spring steel	PN-EN ISO 8752
18	Bottom rod	S235JR / Zn5 / A2	PN-EN 10088-1
19, 20, 21	Underground column	S235JR / A2 / EN GJS-500-7 / S235JR hot dip glav.	PN-79/H-74244 PN-EN 10088-1 PN-EN 1563
22	Bottom break-away flange DN100	EN GJS-500-7	PN-EN 1563
23	Lock DN100	EN GJS-500-7	PN-EN 1563
24	Pin	Spring steel	PN-EN ISO 8752
25	Pin	Spring steel	PN-EN ISO 8752
26	Distance bushing	1.4021	PN-EN 10219
27	Base N03	EN GJS-500-7	PN-EN 1563
28	O-ring	EPDM	PN-EN 681-1
29	Top flange DN100	EN GJS-500-7	PN-EN 1563
30	Pin	Spring steel	PN-EN ISO 8752
31	Undergroung column	S235JR / A2 / EN GJS-500-7 / S235JR hot dip galv.	PN-79/H-74244 PN-EN 10088-1 PN-EN 1563
32	Top rod	S235JR / Zn5 / A2	PN-EN 10219-2 PN-EN 10088-1
33	O-ring	EPDM	PN-EN 681-1
34	Pin	Spring steel	PN-EN ISO 8752
35	Special seal	EPDM	PN-EN 681-1
36	O-ring	EPDM	PN-EN 681-1
37	Washer	1.4301	PN-EN 10088-1
38	Top end	1.4021	PN-EN 10088-1
39	O-ring	EPDM	PN-EN 681-1
40	Bolt	S235JR / Zn5	PN-EN ISO 4762
41	Bottom closing piston	EN GJS-500-7 + EPDM	PN-EN 1563 PN-EN 681-1
42	Tightening spring	Spring steel	PN-EN ISO 8752
43	Piston guide	PE	PN-89/C-89286

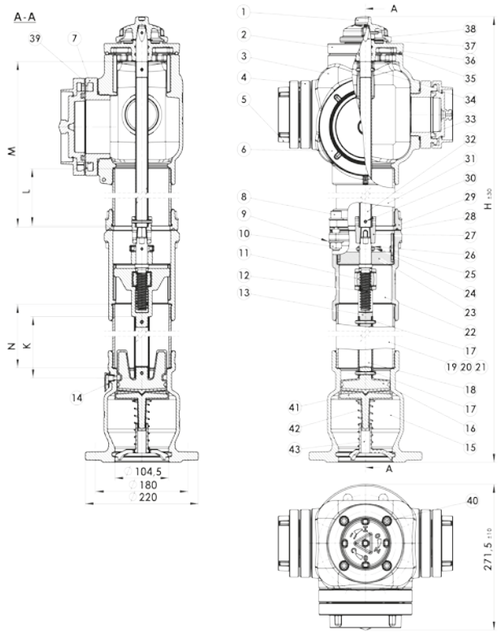

DN	Height H [mm]	Installation depth Rd [mm]	Weight [kg]
100	1950	1000	55,3
100	2150	1250	58,0
100	2350	1500	60,7

INDEX NO.

612

OVERGROUND HYDRANT DN80

DOUBLE CLOSING WITH BALL

APPLICATION

Waterworks and fire-fighting installations.

DESIGN FEATURES

- head, base - ductile iron EN GJS-500-7
- column:
  - 612A - carbon steel S235JR
  - 612B - stainless steel (0H18N9 / AISI 304 / 1.4301)
  - 612C - ductile iron (EN GJS-500-7 / 5.3200 / EN JS1030)
  - 612D - carbon steel S235JR hot dip galv.
- rolled stem made of stainless steel (2H13, AISI 420, 1.4021)
- stem seal - o-ring
- self - draining when fully closed
- rod:
  - column A, C, D - constructional steel with anti-corrosive coating or stainless steel
  - column B - stainless steel
- double closing system
- closing piston - ductile iron, fully vulcanised with EPDM
- internal elements may be replaced without the need to dig the hydrant out under pressure (with the gate valve fully open)
- rotating flange - for easier installation rotates 0° to 360°
- corrosion protection:
  - external - polyester RAL3000, min. 250 µm, UV resistant
  - internal - epoxy coating approved for contact with drinking water
- optionally - brass bushing at piston working location

TECHNICAL DATA / STANDARDS

- design, requirements, test methods, application acc. PN-EN 14339, PN-EN 1074-6
- material acc. PN-EN 1563, PN-79/H-74244, PN-EN 10088-1
- flange PN16 acc. PN-EN 1092-2
- base B75 acc. PN-M-51038
- operating wrench acc. PN-63/M-74085, DIN 3223

No.	Part	Material	Standard
1	Operating nut	EN GJS-500-7	PN-EN 1563
2	Cover HN DN80	EN GJS-500-7	PN-EN 1563
3	Head HN DN80	EN GJS-500-7	PN-EN 1563
4	Base 75	Ak-11 / Aluminium	PN-91/M-51038
5	Nut Tr	CW617N	PN-EN 12164
6	Bolt Tr	2H13	PN-EN 10088-1
7	Rod	S235JR / Zn5 / A2	PN-EN 10219-2 PN-EN 10088-1
8	Hydrant column	S235JR / A2 / EN GJS-500-7 / S235JR hot dip galv.	PN-79/H-74244 PN-EN 10088-1 PN-EN 1563
9	Drainage plug	PE	PN-89/C-89286
10	Bolt	S235JR / Zn5	PN-EN ISO 4762
11	Washer	S235JR / Zn5	PN-EN ISO 7089
12	Nut	S235JR / Zn5	PN-EN ISO 4032
13	Half-ring	EN GJS-500-7	PN-EN 1563
14	Bushing	Copper	PN-79/H92710
15	Bottom ball base	EN GJS-500-7	PN-EN 1563
16	Ball	Steel+ EPDM	PN-EN 10088-1 + PN-EN 681-1
17	Ball base seal	EPDM	PN-EN 681-1
18	Upper ball base	EN GJS-500-7	PN-EN 1563
19	Closing piston	EN GJS-500-7 + EPDM	PN-EN 1563 + PN-EN 681-1
20	Pin	Spring steel	PN-EN ISO 8752
21	Pin	Spring steel	PN-EN ISO 8752
22	Rod DN80	EN GJS-500-7	PN-EN 1563
23	Cover 75	Ak-11 / Aluminium	PN-91/M-51024
24	O-ring	EPDM	PN-EN 681-1
25	Washer	1.4301	PN-EN 10088-1
26	Special seal	EPDM	PN-EN 681-1
27	O-ring	EPDM	PN-EN 681-1
28	Pin	Spring steel	PN-EN ISO 8752
29	Bolt	S235JR / Zn5	PN-EN ISO 4762

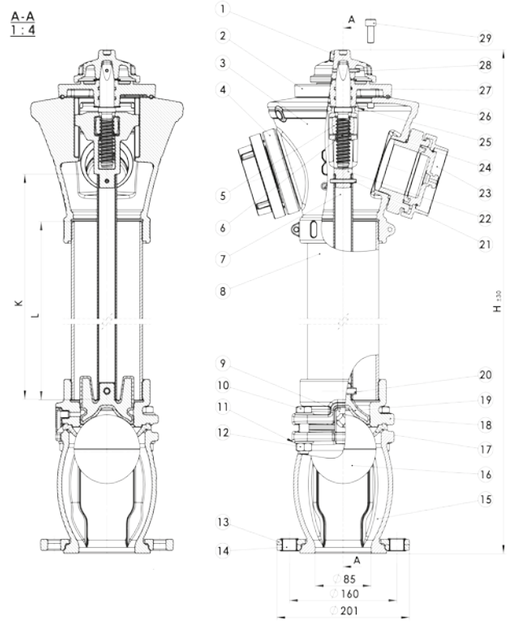

DN	Height H [mm]	Installation depth Rd [mm]	Weight [kg]
80	1950	1000	49,2
80	2150	1250	51,7
80	2350	1500	54,3

INDEX NO.

613

OVERGROUND HYDRANT BREAKABLE DN80

DOUBLE CLOSING WITH BALL

APPLICATION

Waterworks and fire-fighting installations.

DESIGN FEATURES

- head, base - ductile iron EN GJS-500-7
- column:
  - 613A - carbon steel S235JR
  - 613B - stainless steel (0H18N9 / AISI 304 / 1.4301)
  - 613C - ductile iron (EN GJS-500-7 / 5.3200 / EN JS1030)
  - 613D - carbon steel S235JR hot dip galv.
- rolled stem made of stainless steel (2H13, AISI 420, 1.4021)
- protection against breaking
- stem seal - o-ring
- self - draining when fully closed
- rod:
  - column A, C, D - constructional steel with anti-corrosive coating or stainless steel
  - column B - stainless steel
- special A2 bolt at the breaking point
- double closing system
- closing piston - ductile iron, fully vulcanised with EPDM
- internal elements may be replaced without the need to dig the hydrant out under pressure (with the gate valve fully open)
- rotating flange - for easier installation rotates 0° to 360°
- corrosion protection:
  - external - polyester RAL3000, min. 250 µm, UV resistant
  - internal - epoxy coating approved for contact with drinking water
- optionally - brass bushing at piston working location

TECHNICAL DATA / STANDARDS

- design, requirements, test methods, application acc. PN-EN 14339, PN-EN 1074-6
- material acc. PN-EN 1563, PN-79/H-74244, PN-EN 10088-1
- flange PN16 acc. PN-EN 1092-2
- base B75 acc. PN-EN 1092-2
- operating wrench acc. PN-63/M-74085, DIN 3223

No.	Part	Material	Standard
1	Operating nut	EN GJS-500-7	PN-EN 1563
2	Cover HN DN80	EN GJS-500-7	PN-EN 1563
3	Head HN DN80	EN GJS-500-7	PN-EN 1563
4	Base 75	Ak-11 / Aluminium	PN-91/M-51038
5	Cover 75	Ak-11 / Aluminium	PN-91/M-51024
6	Overground column	S235JR / A2 / EN GJS-500-7 / S235JR hot dip galv.	PN-79/H-74244 PN-EN 10088-1 PN-EN 1563
7	Top flange DN80	EN GJS-500-7	PN-EN 1563
8	Special bolt	A2	PN-EN ISO 4762
9	Washer	A2	PN-EN ISO 7089
10	Nut	A2	PN-EN ISO 4032
11	Pin	Spring steel	PN-EN ISO 8752
12	Bottom break-away flange DN80	EN GJS-500-7	PN-EN 1563
13	Pin	Spring steel	PN-EN ISO 8752
14, 15, 16	Underground column HN80	S235JR / A2 / EN GJS-500-7 / S235JR hot dip galv.	PN-79/H-74244 PN-EN 10088-1 PN-EN 1563
17	Drainage plug	PE	PN-89/C-89286
18	Bolt	S235JR / Zn5	PN-EN ISO 4017
19	Bushing	2.0090	PN-79/H92710
20	Half-ring	EN GJS-500-7	PN-EN 1563
21	Bottom ball base	EN GJS-500-7	PN-EN 1563
22	Ball	Steel+ EPDM	PN-EN 10088-1 + PN-EN 681-1
23	Ball base seal	EPDM	PN-EN 681-1
24	Closing piston	EN GJS-500-7 + EPDM	PN-EN 1563 PN-EN 681-1
25	Upper ball base	EN GJS-500-7	PN-EN 1563
26	Pin	Spring steel	PN-EN ISO 8752
27	Rod HD2	S235JR / Zn5 / A2	PN-EN 10219-2 PN-EN 10088-1
28	Slider DN80	EN GJS-500-7	PN-EN 1563
29	Bolt Tr	1.4021	PN-EN 10088-1
30	Nut Tr	CW617N	PN-EN 12164
31	Lock DN80	EN GJS-500-7	PN-EN 1563
32	Pin	Spring steel	PN-EN ISO 8752
33	Distance bushing	1.0037	PN-EN 10219
34	O-ring	EPDM	PN-EN 681-1
35	Base N03	EN GJS-500-7	PN-EN 1563
36	Pin	Spring steel	PN-EN ISO 8752
37	Top rod	S235JR / Zn5 / A2	PN-EN 10219-2 PN-EN 10088-1
38	O-ring	EPDM	PN-EN 681-1
39	Top end	1.4021	PN-EN 10088-1
40	Pin	Spring steel	PN-EN ISO 8752
41	O-ring	EPDM	PN-EN 681-1
42	Special seal	EPDM	PN-EN 681-1
43	Washer	1.4301	PN-EN 10088-1
44	Pin	Spring steel	PN-EN ISO 8752
45	Bolt	S235JR / Zn5	PN-EN ISO 4762

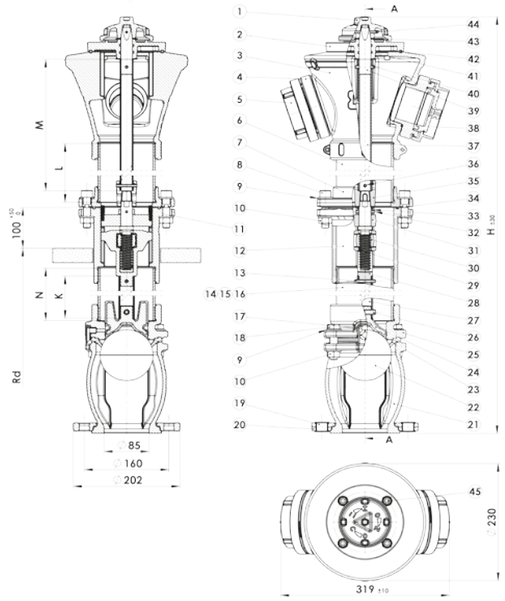

DN	Height H [mm]	Installation depth Rd [mm]	Weight [kg]
80	1950	1000	54,7
80	2150	1250	57,3
80	2350	1500	59,9

MIEJSCE
NA TWÓJ HERB

OUR PROJECTS

Our company has been supplying hydrants for almost 30 years around the world.

Hydrants ensure our safety every day. As an inseparable element of water supply and fire protection installations, provide reliable access to the source of water used for fire fighting.

For many years we have been making the highest efforts to make our hydrants distinguished by reliability.

Bus station - Kaunas (Lithuania)

City centre - Bielawa (Poland)

Aqua Zdrój - Wałbrzych (Poland)

Shopping centre - Kaunas (Lithuania)

National Stadium - Warsaw (Poland)

Silesian Stadium - Chorzów (Poland)

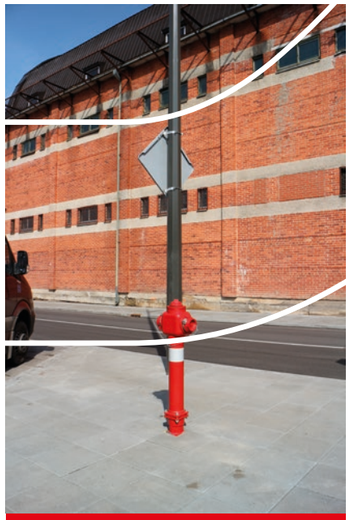
City centre - Kaunas (Lithuania)

City centre - Dzierżoniów (Poland)

DOMEX WATER

DOMEX AROUND THE WORLD

Belarus	Slovenia	Romania	Netherlands	Great Britain
Kazakhstan	Czech Republic	Hungary	France	Portugal
Russia	Italy	Serbia	Sweden	Cuba
Latvia	Ukraine	Greece	Denmark	Srilanka
Estonia	Slovakia	Spain	Norway	Egypt
Lithuania	Bulgaria	Germany	Ireland	Poland

DOMEX Sp. z o.o. | 58-200 Dzierżoniów | Pieszycka 11 | NIP: 8821866503 | REGON: 0000075395 | POLAND

Secretariat +48 74 62 62 800 | domex@domex-group.com
Sales Department +48 74 62 62 823-826 | handlowy@domex-group.com

www.domex-group.com